GENERAL NOTES

G1. THESE DRAWINGS SHALL BE READ IN CONJUNCTION WITH ALL ARCHITECTURAL AND OTHER CONSULTANTS DRAWINGS AND SPECIFICATIONS AND WITH SUCH OTHER WRITTEN INSTRUCTIONS AS MAY BE ISSUED DURING THE COURSE OF THE CONTRACT.

THESE RETAINING WALL DETAILS ARE GENERIC ONLY AND ARE APPLICABLE TO THE SOIL CONDITIONS IN NOTE W6. THESE DESIGN DRAWINGS SHOULD BE CERTIFIED BY A QUALIFIED ENGINEER TO ENSURE THE GROUND AND LOADING CONDITIONS ARE SUITABLE FOR EACH INDIVIDUAL SITE.

G2. IF ANY DISCREPANCY OCCURS ON THE ENGINEERS DRAWINGS OR BETWEEN DRAWINGS AND SPECIFICATION, THE CONTRACTOR SHALL DURING TENDERING ASSUME THE LARGER/GREATER. ANY DISCREPANCY SHALL BE REFERRED TO THE ENGINEER BEFORE PROCEEDING WITH WORK.

G3. All SET OUT DIMENSIONS SHALL BE OBTAINED FROM ARCHITECT'S DETAILS. DIMENSIONS SHALL NOT BE OBTAINED BY SCALING THE STRUCTURAL DRAWINGS.

G4. SETTING OUT DIMENSIONS SHOWN ON THE DRAWINGS SHALL BE VERIFIED BY THE BUILDER.

G5. DURING CONSTRUCTION THE STRUCTURE SHALL BE MAINTAINED IN A STABLE CONDITION AND NO PART SHALL BE OVER STRESSED.

G6. UNLESS NOTED OTHERWISE LEVELS ARE IN METERS AND DIMENSIONS ARE IN MILLIMETRES.

G7. ALL WORKMANSHIP AND MATERIALS SHALL BE IN ACCORDANCE WITH THE REQUIREMENTS OF THE SAA CODES AND THE BY-LAWS AND ORDINANCES OF THE RELEVANT BUILDING AUTHORITY, EXCEPT WHERE VARIED BY THE PROJECT SPECIFICATION AND/OR DRAWINGS:

AS 1289	METHODS OF TESTING SOILS FOR ENGINEERING PURPOSES.
AS 1302	STEEL REINFORCING BARS FOR CONCRETE.
AS 1554.1	WELDING OF STEEL STRUCTURES
AS 3600	CONCRETE STUCTURES.
AS 3610	FORMWORK FOR CONCRETE.
AS 3798	GUIDELINES ON EARTHWORKS FOR COMMERCIAL AND RESIDENTIAL DEVELOPMENTS.
AS 4100	STEEL STRUCTURES.

G8. THE STRUCTURAL COMPONENTS DETAILED ON THESE DRAWINGS HAVE BEEN DESIGNED IN ACCORDANCE WITH THE RELEVANT STANDARDS AUSTRALIA CODES AND LOCAL GOVERNMENT ORDINANCES FOR THE FOLLOWING LOADINGS:-

LIVE LOAD = 5 kPa (MINIMUM REQUIREMENT TO AS4678)

G10. ANY SUBSTITUTION OF MATERIALS SHALL BE APPROVED BY A QUALIFIED ENGINEER AND INCLUDED IN ANY TENDER.

BORED PIER

B1. ALL PIERS TO BE IN ACCORDANCE WITH AS2159 'SAA PILING CODE'.

B2. THE CONTRACTOR SHALL RECORD THE RELEVANT INFORMATION AS LISTED IN AS2159 CLAUSE 4.1.7 AND SUBMIT IT TO THE SUPERINTENDENT.

B3. DRILL HOLES TO THE SETS OUT AND DEPTH SHOWN ON THE DRAWINGS IF DRILL HOLES EXTEND THROUGH FILL OR UNSTABLE GROUND PROVIDE TEMPORARY STEEL CASING AS REQUIRED. ANY PERCHED WATER SHALL BE REMOVED BY PUMPING. SOCKET LENGTHS AND BASES SHALL BE CLEANED OF ANY LOOSE MATERIAL. ANY CLAY SMEARING SHALL BE REMOVED TO THE ENGINEERS APPROVAL. WHERE DIRECTED BY THE ENGINEER, THE CONTRACTOR IS TO RECOVER A TUBE SAMPLE FROM THE BOTTOM OF THE BORED PIER EXCAVATION FOR INSPECTION AND/OR TESTING. THE CONTRACTOR MAY BE REQUIRED TO EXTEND THE HOLE BORED, BASED ON RESULTS OF THIS INSPECTION OR TESTING.

B4. WHEN POST INSTALLATION IS COMPLETE, PLACE CONCRETE IN THE PIER TO TO NATURAL SURFACE LEVEL. ALL WATER TO BE REMOVED FROM HOLE BEFORE PLACING CONCRETE.

B5. MINIMUM CEMENT CONTENT IN PIERS SHALL BE 320kg/m3.

B6. ALLOWABLE TOLERANCES:
- PIER CUTOFF LEVEL.....±20mm
- PIER POSITION AT CUTOFF LEVEL.....±75mm
- PIER INCLINATION.....2%

FOUNDATIONS

F1. FOUNDATION MATERIAL TO BE NATURAL SOILS WITH A MIN END SAFE BEARING CAPACITY OF 100kPa & SHAFT ADHESION OF 10kPa FOR BORED PIERS.

F2. THE ASSUMED FOUNDING LEVELS OF THE FOOTINGS, ARE TO BE AS INDICATED ON THE DRAWINGS. BEFORE ANY REINFORCEMENT OR CONCRETE IS PLACED, THE SAFE BEARING CAPACITY OF THE GROUND IS TO BE VERIFIED BY A QUALIFIED ENGINEER ENGAGED BY THE CONTRACTOR. EXCAVATION SHALL CONTINUE UNTIL THE REQUIRED BEARING CAPACITY IS FOUND. THE OVER-EXCAVATION SHALL BE BACK-FILLED WITH A MASS CONCRETE MIX WITH THE APPROVAL OF THE ENGINEER.

F3. EXCAVATION SHALL NOT EXTEND BELOW A LINE DIPPING AT 45° AND AWAY FROM THE NEAREST UNDERSIDE CORNER OF ANY EXISTING FOOTINGS.

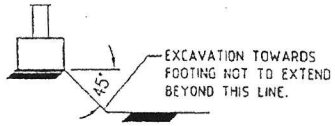

F4. EXCAVATE TO FIRM, DRY GROUND AND MAINTAIN THE EXCAVATION IN A DRY CONDITION. REMOVE ANY SOFT GROUND AS DIRECTED BY THE GEOTECHNICAL ENGINEER.

F5. THE BACKFILL AREA BEHIND THE RETAINING WALLS IS DESIGNED TO CARRY PEDESTRIAN TRAFFIC ONLY. BUILDINGS AND VEHICULAR TRAFFIC SHOULD BE KEPT AT A MINIMUM DISTANCE OF 'H' FROM THE BACK OF THE WALLS.

F6. POSTS SHOULD BE INSTALLED AS SHOWN ON THESE DIAGRAMS AND PROPPED IN POSITION UNTIL CONCRETE HAS SET. IT IS THE RESPONSIBILTY OF THE INSTALLER TO ENSURE VERTICALLY AND ACCURATE LOCATION OF POSTS TO THE TOLERANCES SPECIFIED. WHEN INSTALLING PRE-CAST CONCRETE THE FIRST PLANKS SHOULD BE SET IN BED OF WET MORTAR AT EACH END. ALL PLANKS SHOULD BE CAREFULLY LOWERED INTO THEIR FINAL LOCATION. IT IS THE RESPONSIBILITY OF THE INSTALLER TO TAKE ALL REASONABLE CARE TO AVOID DAMAGE TO ANY COMPONENTS DURING INSTALLATION. ANY DAMAGED COMPONENTS SHOULD BE REPLACED OR REPAIRED.

STRUCTURAL STEELWORK

S1. ALL MATERIALS, WORKMANSHIP, FABRICATION AND ERECTION SHALL COMPLY WITH THE REQUIREMENTS OF AS4100, AS1538, AS1554 AND THIS SPECIFICATION.

S2. UNLESS SHOWN OTHERWISE, ALL STEEL SHALL BE IN ACCORDANCE WITH AS1204 GRADE 300.

S3. SUBSTITUTIONS FOR STEEL SECTIONS SHOWN ON DRAWINGS SHALL NOT BE MADE WITHOUT THE APPROVAL OF THE ENGINEER.

S4. UNLESS SPECIFIED OTHERWISE, STEELWORK SHALL BE PREPARED BY ABRASIVE GRIT BLASTING OR PICKLING (CLASS 2 1/2) FOLLOWED BY:

i) APPLY ONE COAT OF AN INORGANIC ZINC SILICATE, FOLLOWED BY ONE COAT OF ALL WEATHER GLOSS ACRYLIC WITH UV PROTECTOR.

ii) HOT DIP GALVANISING.

iii) EPOXY HIGH CORROSION-RESISTANT SYSTEM OR EQUIVALENT. GALAVISED STEEL SHOULD HAVE A PRIMER COAT FOLLOWED BY A FINISH COAT, BOTH OF ZINC DUST OR ZINC OXIDE TYPE. BOTH COATS MAY EITHER BE BRUSHED OR SPRAYED.

S5. THE CONTRACTOR SHALL PROVIDE ALL CLEATS AND DRILL ALL HOLES NECESSARY FOR FIXING STEELTIMBER AND OTHER ELEMENTS TO STEEL WHETHER OR NOT DETAILED ON THE DRAWINGS.

RETAINING WALL

W1. SEAL BACKFILL WITH A COMPACTED LAYER OF MATERIAL WITH LOW PERMEABILITY AND PROVIDE AN OPEN DRAIN AT SURFACE IF PAVING OR SIMILAR IS NOT TO BE CONSTRUCTED.

W2. BACKFILL WITH MATERIAL FROM SITE COMPACTED IN LAYERS NO MORE THAN 150mm DEEP. BACKFILL SHOULD NOT BE PLACED BEHIND THE WALL UNTIL AT LEAST TEN DAYS AFTER POURING FOOTINGS. PREFERABLE BACKFILL IS COARSE GRAINED SOIL WITHOUT AN ADMIXTURE OF FINE SOIL PARTICLES SUCH AS VERY PERMEABLE CLEAN SAND OR GRAVELS.

W3. PROVIDE 300mm FREE DRAINING GRANULAR BACKFILL FOR FULL HEIGHT TO BACK FACE OF WALL.

W4. PROVIDE Ø90mm AGG.DRAIN AT BASE OF WALL AND CONNECT TO LEGAL POINT OF DISCHARGE. SURROUND AGG DRAIN WITH FILTER SOCK (GEOTEXTILE) AND AT LEAST 300mm OF GRAVEL OR CRUSHED STONE.

W5. TREAT EARTH FACE WITH BITUMINOUS PAINT AND PROVIDE 1 LAYERS OF 0.2mm WATERPROOF MEMBRANE.

W6. RETAINING WALLS HAVE BEEN DESIGNED TO RETAIN A FREE DRAINING, WELL COMPACTED BACKFILL WITH A SLOPE NOT EXCEEDING 10° FROM HORIZONTAL (REFER DIAGRAMS). FOR DESIGN PURPOSES THE FOLLOWING SOIL PROPERTIES HAVE BEEN USED:-

BACKFILL DENSITY = 1800 Kg/m³
BACKFILL FRICTION ANGLE = 25°
BACKFILL COHESION C'= 0 kPa

WHICH CORRESPOND TO STIFF SANDY CLAYS, MEDIUM DENSE CLAYEY SANDS AND SANDY SILT MATERIALS. PARTIAL LOAD AND MATERIAL UNCERTAINTY FACTORS HAVE BEEN APPLIED IN ACCORDANCE WITH AS 4678.

W7. GLOBAL SLIP FAILURE IS NOT CONSIDERED AN ISSUE WHEN THE SOIL STRENGTH INCREASES WITH DEPTH. CONSULTANT AN ENGINEER IF THIS IS NOT THE CASE ie. A SOFT LAYER OF CLAY IS BELOW THE WALL AND FOUNDATIONS.

CONCRETE

C1. ALL WORKMANSHIP AND MATERIALS SHALL BE IN ACCORDANCE WITH AS 3600 EXCEPT WHERE VARIED BY THE CONTRACT DOCUMENTS.

C2. CONCRETE QUALITY :-

ELEMENT	EXPOSURE CLASSIF'N	SLUMP	MAX. AGG.	CEMENT TYPE	CONC. GRADE	COVER U.N.O.
FOOTINGS	A1 - B1	80	20	G.P.	20 MPa	75
PRECAST SLEEPERS	A1 - A2	100	10	G.P.	32 MPa	25

C3. ALL FORMWORK TO COMPLY WITH AS1509

C4. SIZES OF CONCRETE ELEMENTS DO NOT INCLUDE THICKNESS OF APPLIED FINISHES.

C5. CONSTRUCTION OF JOINTS WHERE NOT SHOWN SHALL BE LOCATED TO THE APPROVAL OF THE ENGINEER.

C6. NO HOLES OR CHASES OTHER THEN THOSE SHOWN ON STRUCTURAL DRAWINGS SHALL BE MADE IN CONCRETE MEMBERS WITHOUT THE PRIOR APPROVAL OF THE ENGINEER.

C7. REINFORCEMENT IS REPRESENTED DIAGRAMICALLY. IT IS NOT NECESSARILY SHOWN IN TRUE PROJECTION.

C8. SPLICES IN REINFORCEMENT SHALL BE MADE ONLY IN THE POSITIONS SHOWN. THE WRITTEN APPROVAL OF THE ENGINEER SHALL BE OTAINED FOR ANY OTHER SPLICES WHERE THE LAP LENGTH IS NOT SHOWN IT SHALL BE SUFFICIENT TO DEVELOP THE FULL STRENGTH OF THE REINFORCEMENT.

C9. WELDING OF REINFORCEMENT WILL NOT BE PERMITTED UNLESS SHOWN ON THE STRUCTURAL DRAWINGS OR APPROVED IN WRITTING BY THE CONSULTING ENGINEER.

C10. REINFORCEMENT SYMBOLS
- N - DENOTES GRADE 500 N DEFORMED BAR TO AS4671
- R - DENOTES GRADE 230 R HOT ROLLED PLAIN BARS TO AS1302
- F - DENOTES HARD DRAWN WIRE REINFORCEMENT FABRIC TO AS1304
- W - DENOTES HARD DRAWN PLAIN WIRE TO AS1303

C11. CONCRETE CURING AND STRIPPING TO BE IN ACCORDANCE WITH THE RELEVANT SAA CODES. CONCRETE TO BE CURED A MINIMUM OF 7 DAYS AFTER POURING.

© THESE DRAWINGS ARE THE INTELLECTUAL PROPERTY OF SJE CONSULTING. COPYRIGHT RESERVED - NO PORTION OF THESE DRAWINGS MAY BE REPRODUCED BY ANY PROCESS WHATSOEVER WITHOUT THE WRITTEN CONSENT OF SJE CONSULTING. IF IN DOUBT ASK!

A	FIRST ISSUE	26/07/06	S A

CLIENT:

SJE CONSULTING

PROJECT REFERENCE: 18000 PRINTED : 08/08/2006 BY: SHANE ANDERSON A1

PROPOSED RETAINING WALL FOR PEARDS GARDEN WORLD BORELLA ROAD ALBURY NSW

DESIGN: MARK WALLACE | DRAWN: SHANE ANDERSON | DRAWING NO | REVISION

RETAINING WALL SCHEDULE

HIEGHT "H"	DEPTH "D"	EMBED "E"	DIAMETER "d"	COLUMN SIZE C1
1000	1400	1200	450	100 UC15
1200	1600	1400	450	100 UC15
1400	1800	1600	450	100 UC15
1600	2000	1800	450	150 UC23
1800	2300	2000	450	150 UC23
2000	2500	2200	450	150 UC31

THESE RETAINING WALL DETAILS ARE GENERIC ONLY AND ARE APPLICABLE TO THE SOIL CONDITIONS IN NOTE W6 ON SHEET 1. THESE DESIGN DRAWINGS SHOULD BE CERTIFIED BY A QUALIFIED ENGINEER TO ENSURE THE GROUND AND LOADING CONDITIONS ARE SUITABLE FOR EACH INDIVIDUAL SITE.

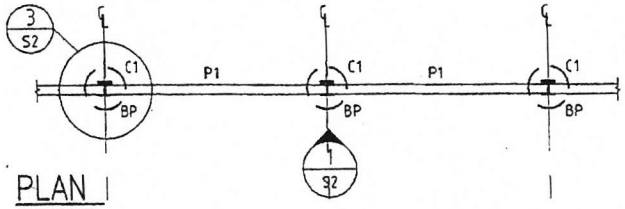

PLAN
SCALE 1:50

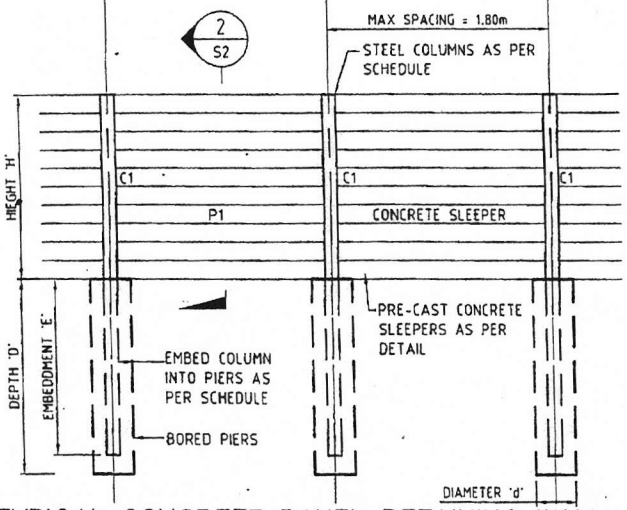

TYPICAL CONCRETE PANEL RETAINING WALL
SCALE 1:50

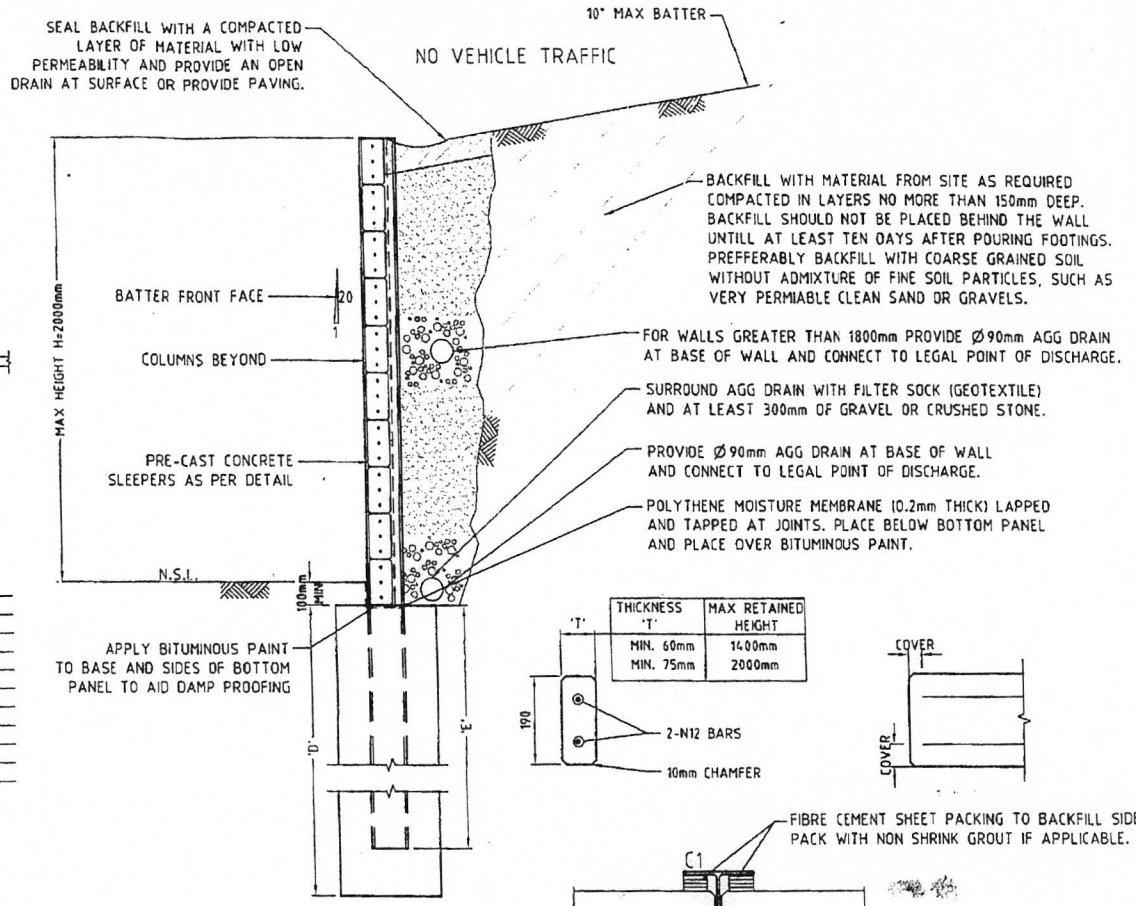

SECTION 2/S2
SCALE 1:20
STEEL POST WALL

THICKNESS 'T'	MAX RETAINED HEIGHT
MIN. 60mm	1400mm
MIN. 75mm	2000mm

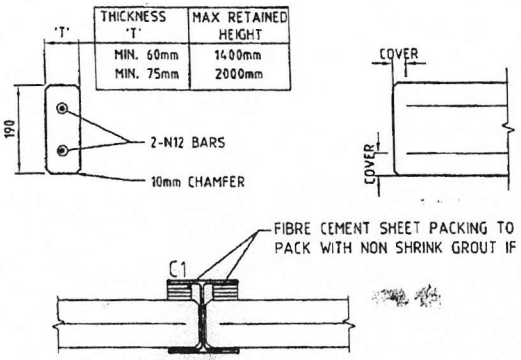

DETAIL 3/S2
SCALE 1:10
TYPICAL CONCRETE SLEEPER DETAIL

© THESE DRAWINGS ARE THE INTELLECTUAL PROPERTY OF SJE CONSULTING. COPYRIGHT RESERVED - NO PORTION OF THESE DRAWINGS MAY BE REPRODUCED BY ANY PROCESS WHATSOEVER WITHOUT THE WRITTEN CONSENT OF SJE CONSULTING. IF IN DOUBT ASK!

REV			
A	FIRST ISSUE	26/07/06	S A

CLIENT:

SJE CONSULTING

PROJECT REFERENCE: **18000** PRINTED : 08/08/2006 BY: SHANE ANDERSON A1

PROPOSED RETAINING WALL
FOR PEARDS GARDEN WORLD
BORELLA ROAD
ALBURY NSW

DESIGN: MARK WALLACE DRAWN: SHANE ANDERSON